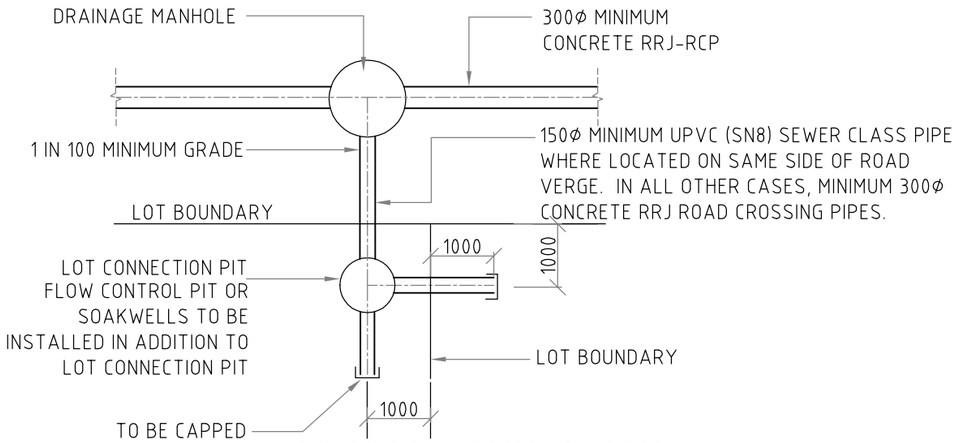

TYPICAL CONNECTION - MULTIPLE LOTS

N.T.S.

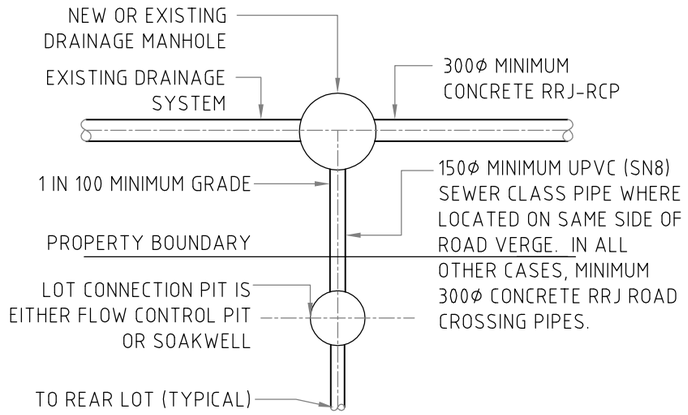

TYPICAL CONNECTION - SINGLE LOTS

N.T.S.

LOT CONNECTION PIT DIAMETER SELECTION

DEPTH TO INVERT OF OUTLET PIPE	LOT CONNECTION PIT NOMINAL I.D. (mm)
800 TO 1300	900 MINIMUM - NO STEP IRONS
> 1300	1050 MINIMUM - STEP IRONS

NOTES:

1. THE GRANTING OF AN EASEMENT - 2m x 2m MINIMUM, BENEFITING AND BURDENING THE APPROPRIATE LOTS, IS REQUIRED IN ALL SITUATIONS WHERE THE LOT CONNECTION IS PROVIDED FOR MULTIPLE PROPERTIES
2. TYPICALLY THE LOT CONNECTION PIT FOR CLAY / SILTY SANDY < SOILS SITES WILL BE A FLOW CONTROL PIT - REFER TO STANDARD DRAWING ES-40-3
3. TYPICALLY THE LOT CONNECTION PIT FOR SANDY SOIL SITES WILL BE A SOAKWELL - REFER TO STANDARD DRAWING ES-40-2
4. NEW MANHOLES TO BE INSTALLED IN ACCORDANCE WITH THE CITY'S' STANDARD SPECIFICATIONS - ES19-8

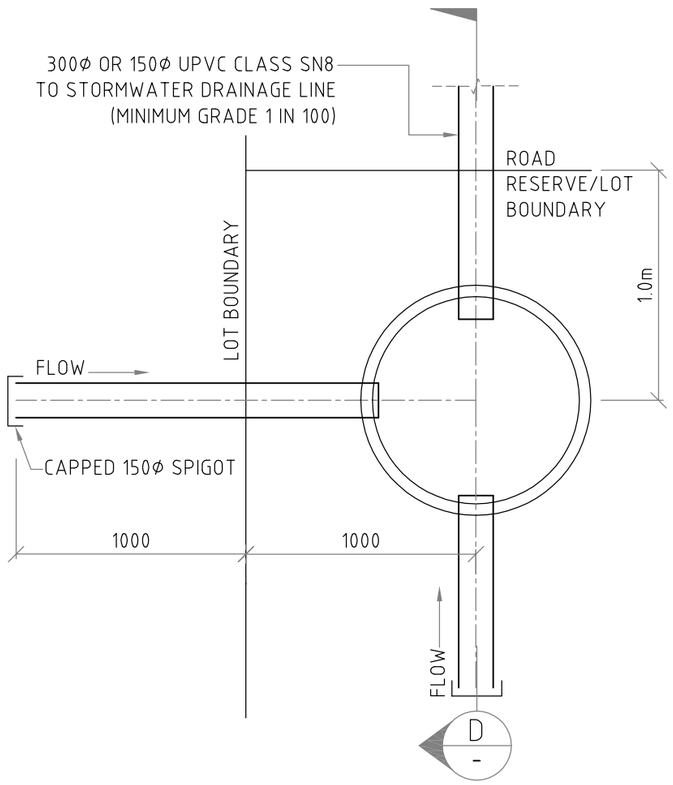

TYPICAL LOT CONNECTION PIT - MULTIPLE LOTS

N.T.S.

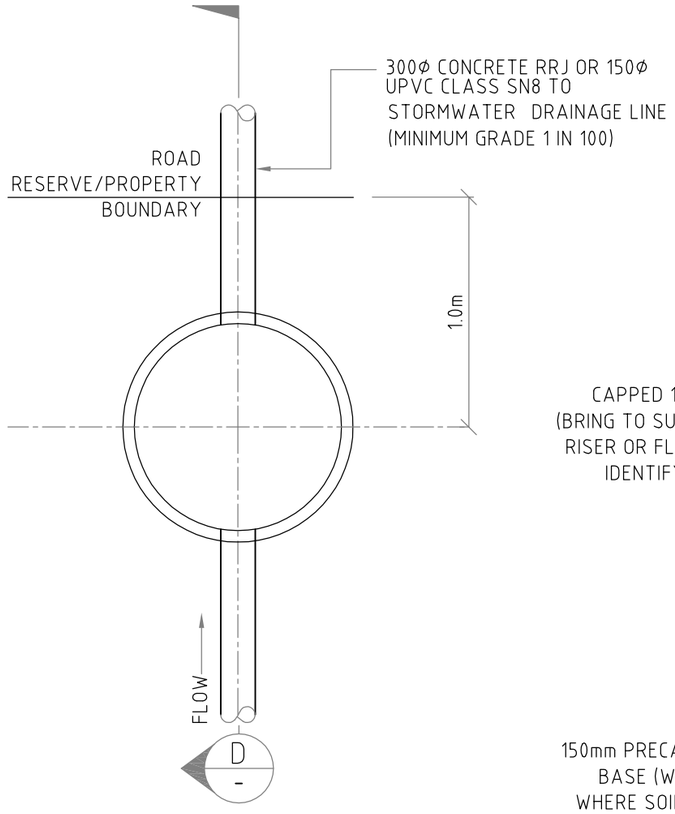

TYPICAL LOT CONNECTION PIT - SINGLE LOTS

N.T.S.

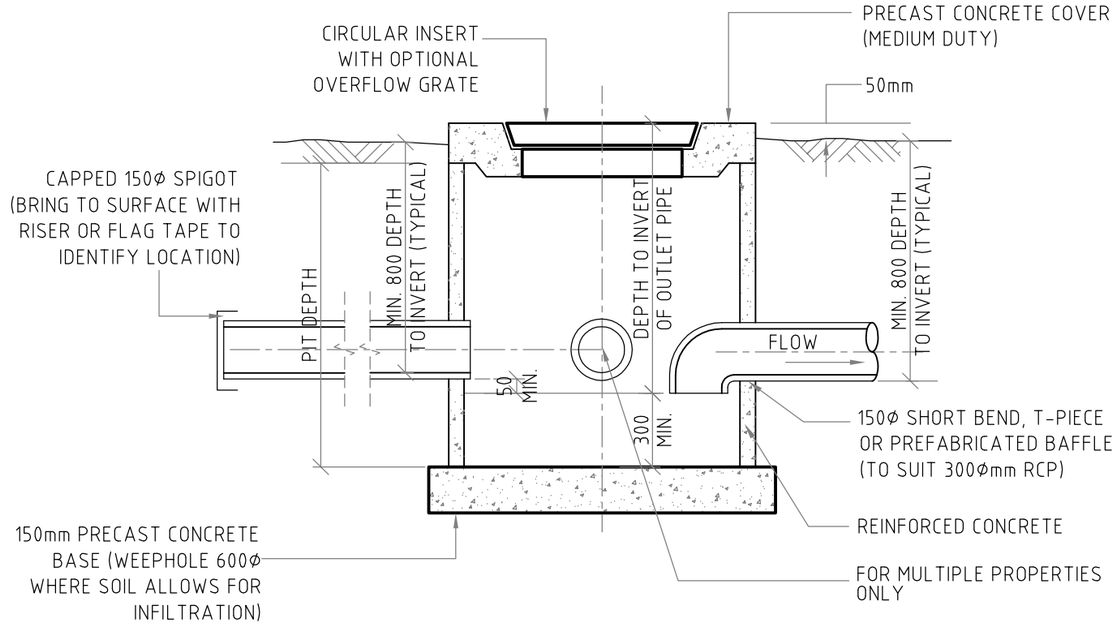

SECTION D-D

N.T.S.

AMENDMENTS

REVISION	DATE	DESCRIPTION	BY	CHECKED	APPROVED
2	09/04/2015	MULTIPLE LOTS CONNECTION PITS DETAILS ADDED	SA	MB	MB
1	31/01/11	UPDATE TITLE BLOCK	GL	MB	MB

GENERAL NOTES

1. THIS DRAWINGS ALWAYS REMAINS THE PROPERTY OF THE CITY OF GOSNELLS AND MUST NOT BE RETAINED OR REPRODUCED WITHOUT PERMISSION
2. IN THE ABSENCE OF THE APPROVED SIGNATURE (ie MANAGER TECHNICAL SERVICES) THIS DRAWING SHALL BE TREATED AS PRELIMINARY
3. ALL DIMENSIONS ARE IN MILLIMETRES UNLESS NOTED OTHERWISE

CITY OF GOSNELLS
2120 Albany Highway Gosnells 6110
PO Box 662, GOSNELLS 6990
WESTERN AUSTRALIA
Telephone 08 9397 3000
Facsimile 08 9397 3333
Online www.gosnells.wa.gov.au

STANDARD DRAWING

LOT CONNECTION

DESIGN	MJJ/MB	DRAWN GL	DRAWING A3
SCALE	NTS	CHECKED MB	DATE 07/04/09

STANDARD DRAWING NUMBER ES-50

MANAGER TECHNICAL SERVICES

M.BOTTE 09/04/15

M. BOTTE

23/05/2017 10:52:55 AM S:\STANDARD DRAWINGS\ES-50 STANDARD DRAINAGE - LOT CONNECTION.DWG

Document Set ID: 9173311
Version: 1, Version Date: 15/04/2026