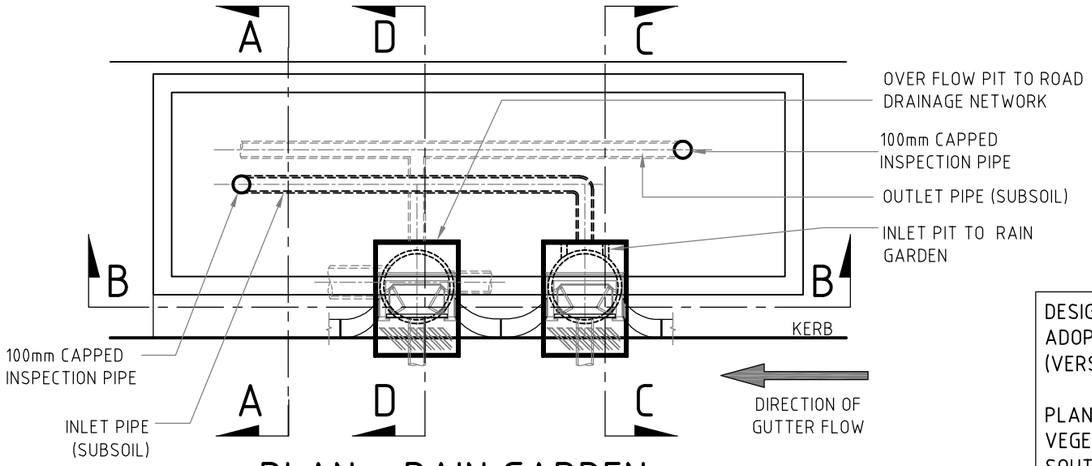

PLAN - RAIN GARDEN

SCALE 1:100

LEGEND

- 300- 500mm FILTER MEDIA
- 50mm TRANSITION LAYER
- 400 - 800mm SAND AND CARBON SOURCE (SUBMERGED LAYER)
- 200mm DRAINAGE LAYER (WASHED GRAVEL) MIN. 50mm PIPE COVER
- TWL TOP WATER LEVEL

DESIGN TO BE COMPLIANT WITH CURRENT BEST PRACTICE AND THE ADOPTION GUIDELINES FOR STORMWATER BIOFILTRATION SYSTEMS (VERSION 2, CRC FOR WATER SENSITIVE CITIES, 2015)

PLANTING TO BE COMPLIANT CURRENT BEST PRACTICE AND THE VEGETATION GUIDELINES FOR STORMWATER BIOFILTERS IN SOUTH-WEST OF WESTERN AUSTRALIA (MONASH UNIVERSITY, 2014)

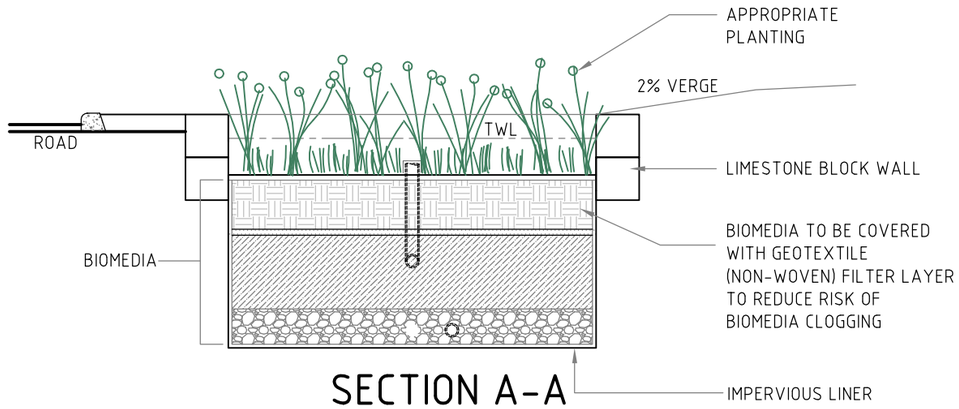

SECTION A-A

SCALE 1:50

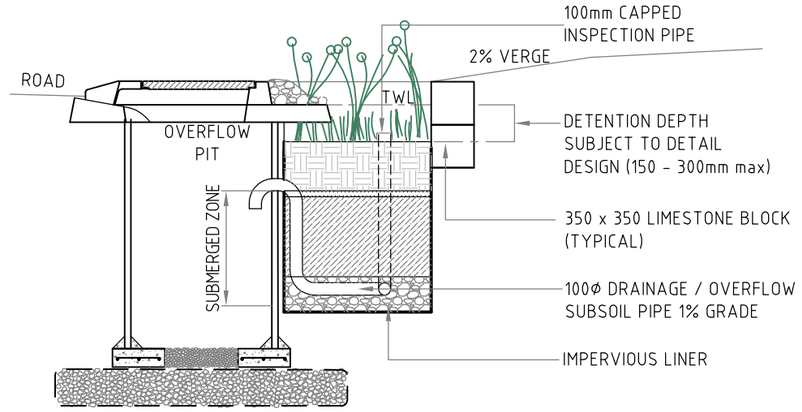

SECTION D-D

SCALE 1:50

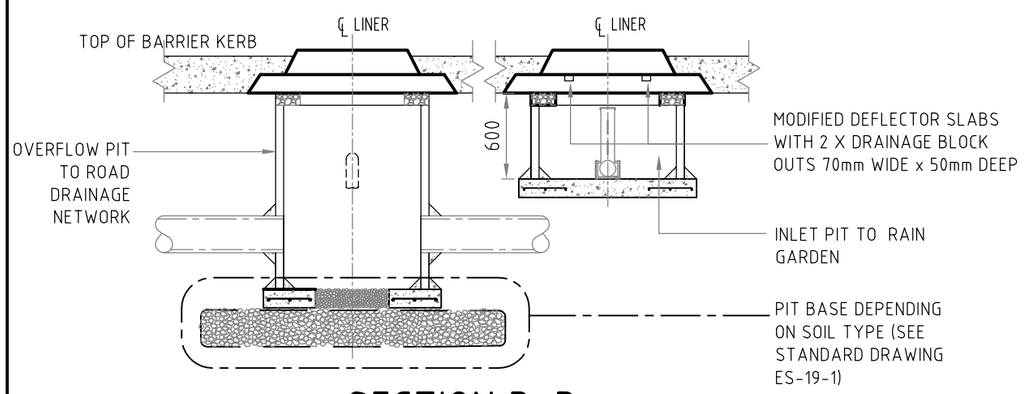

SECTION B-B

SCALE 1:50

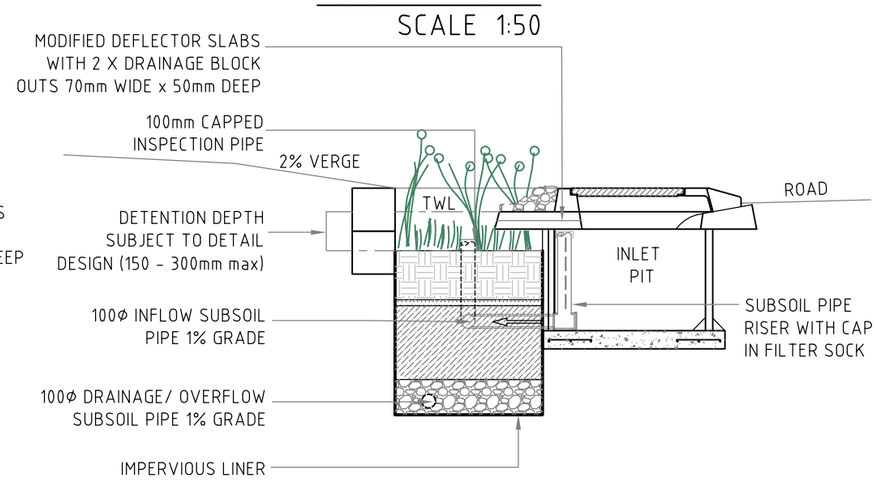

SECTION C-C

SCALE 1:50

NOTES:

1. FILTER MEDIA (TYPICAL)

   FILTER MEDIA TO BE USED SHOULD BE LOAMY SAND WITH A HYDRAULIC CONDUCTIVITY OF BETWEEN 100 - 300mm/HR e.g. LOCAL NATIVE SAND MIXED WITH GIN GIN LOAM. THE GIN GIN LOAM SHOULD HAVE ALL PARTICLE SIZE RANGES PRESENT FROM THE 0.075mm - 4.75mm SIEVE (AS DEFINED BY AS1289.3.6.1 - 1995) WITH A CLAY AND SILT FRACTION (<0.05mm) AT NO MORE THAN 3%. THE GIN GIN LOAM SHOULD ALSO HAVE LESS THAN 5% ORGANIC MATTER.

2. TRANSITION LAYER (TYPICAL)

   THE TRANSITION LAYER WILL BE 50mm THICK AND WILL BE SITUATED BETWEEN THE FILTER MEDIA AND THE SUBMERGED ZONE. IT WILL CONSIST OF CLEAN WELL-GRADED COURSE SAND MATERIAL (<4mm) CONTAINING <2% FINES. TO AVOID MIGRATION OF THE FILTER MEDIA INTO THE TRANSITION LAYER, THE PARTICLE SIZE DISTRIBUTION OF THE SAND SHOULD BE ASSESSED TO ENSURE IT MEETS 'BRIDGING CRITERIA', THAT IS, THE SMALLEST 15% OF THE SAND PARTICLES BRIDGE WITH THE LARGEST 15% OF THE FILTER MEDIA PARTICLES.

3. SUBMERGED ZONE (TYPICAL)

   THE SUBMERGED ZONE SHOULD CONSIST OF A MIX OF MEDIUM-TO-COURSE SAND (0.25-1mm) AND 5% HARDWOOD CHIPS BY VOLUME (JARRAH OR EQUIVALENT - APPROXIMATELY 6mm GRADINGS) AND 5% MULCH BY VOLUME (SUGAR CANE MULCH OR EQUIVALENT).

4. IMPERVIOUS LINER (TYPICAL)

   BENTONITE IMPREGNATED GEOTEXTILE OR SIMILAR (UNLESS CLAY SUBGRADE). IF GROUNDWATER IS OF SUITABLE QUALITY AND WITHIN THE ROOT ZONE THE BIOFILTER MAY BE LEFT UNLINED AT THE BASE TO UTILISE THIS WATER SOURCE OVER DRY PERIODS.

5. DRAINAGE LAYER (TYPICAL)

   THE DRAINAGE LAYER WILL SURROUND THE DRAINAGE PIPE TO PROTECT IT FROM SOIL INFILTRATING THE PIPE. IT SHOULD BE MADE UP OF CLEAN, FINE GRAVEL (2-5mm WASHED SCREENINGS) AND WILL HAVE A DEPTH OF 200mm ENGULFING PERFORATED DRAINAGE PIPE.

6. AFFECTED EXISTING RETICULATION AND EXISTING TURF TO BE REPLACED AFTER WORKS ARE COMPLETED.

7. LOCATION OF INLET PITS, WIDTH AND LENGTH OF RAIN GARDENS MAY VARY.

8. RAIN GARDENS TO BE SIZED ACCORDING TO CATCHMENTS.

9. THE RAIN GARDEN REQUIRES SUBSOIL DRAINAGE AND A SUBMERGED ZONE.

10. MODIFIED DEFLECTOR SLAB ONLY REQUIRED FOR THE INLET PIT TO THE RAIN GARDEN.

THIS IS THE CITY OF GOSNELLS' STANDARD DESIGN. TO FOSTER INNOVATION THE CITY IS OPEN TO CONSIDER ALTERNATIVE WATER QUALITY TREATMENT SOLUTIONS BASED ON FUNCTIONALITY AND LONG TERM ASSET MANAGEMENT LIFE CYCLE CONSIDERATIONS. ACCEPTANCE SUBJECT TO SUBMISSION OF A DETAILED DESIGN AND INFORMATION DEMONSTRATING COMPLIANCE WITH CURRENT BEST PRACTICE TO CITY'S SATISFACTION.

AMENDMENTS

REVISION	DATE	DESCRIPTION	BY	CHECKED	APPROVED
1	13/01/2016	MODIFIED THE WHOLE DRAWING	SA	AT	MB

GENERAL NOTES

1. THIS DRAWINGS ALWAYS REMAINS THE PROPERTY OF THE CITY OF GOSNELLS AND MUST NOT BE RETAINED OR REPRODUCED WITHOUT PERMISSION
2. IN THE ABSENCE OF THE APPROVED SIGNATURE (ie MANAGER TECHNICAL SERVICES) THIS DRAWING SHALL BE TREATED AS PRELIMINARY
3. ALL DIMENSIONS ARE IN MILLIMETRES UNLESS NOTED OTHERWISE

CITY OF GOSNELLS
2120 Albany Highway Gosnells 6110
PO Box 662, GOSNELLS 6990
WESTERN AUSTRALIA
Telephone 08 9397 3000
Facsimile 08 9397 3333
Online www.gosnells.wa.gov.au

STANDARD DRAWING

VERGE RAIN GARDEN / BIOFILTER DESIGN

DESIGN DK/SA	DRAWN SA	DRAWING A3	
SCALE AS SHOWN	CHECKED AT	DATE 13/1/16	

STANDARD DRAWING NUMBER ES-23

MANAGER TECHNICAL SERVICES M.BOTTE 15/1/16

M. BOTTE

23/05/2017 10:34:18 AM S:\STANDARD DRAWINGS\ES-23 RAIN GARDEN DESIGN.DWG

Document Set ID: 9323262
Version: 1, Version Date: 06/08/2026