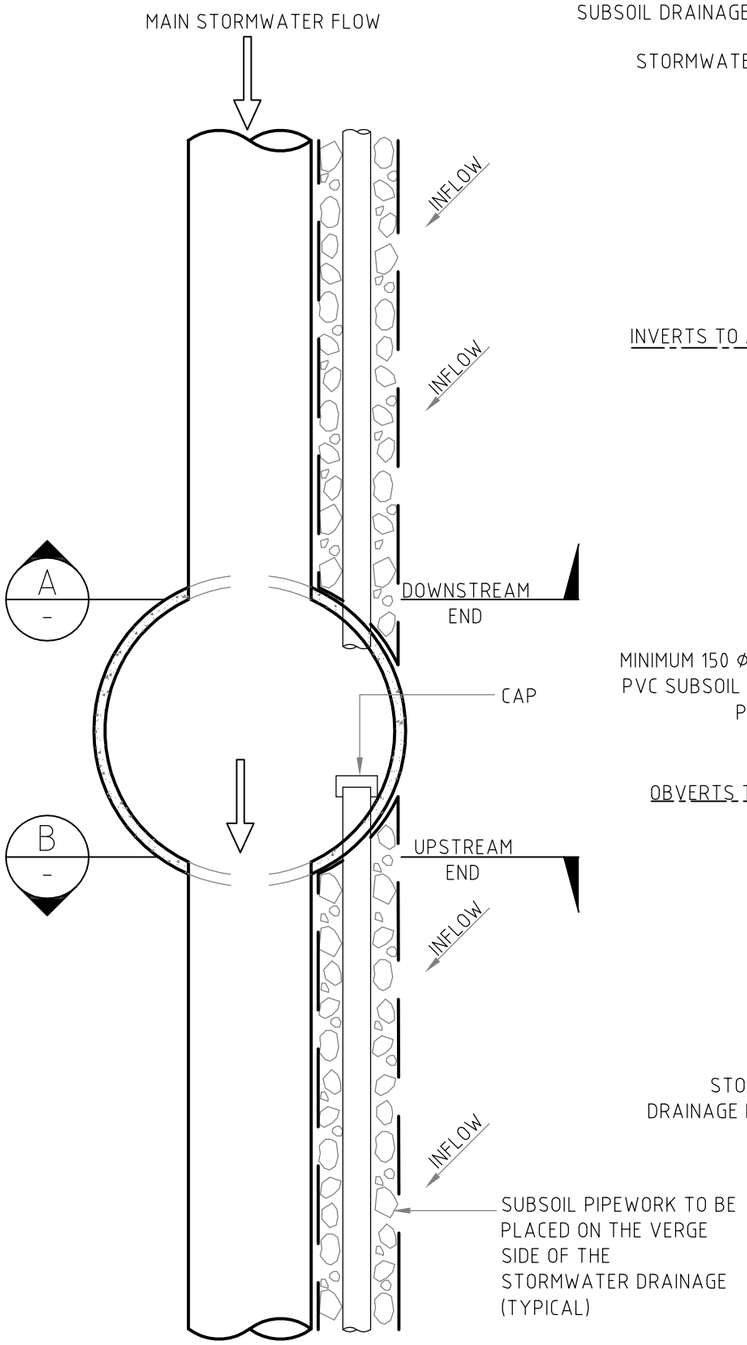

STANDARD SUBSOIL DRAINAGE DETAIL

SCALE N.T.S

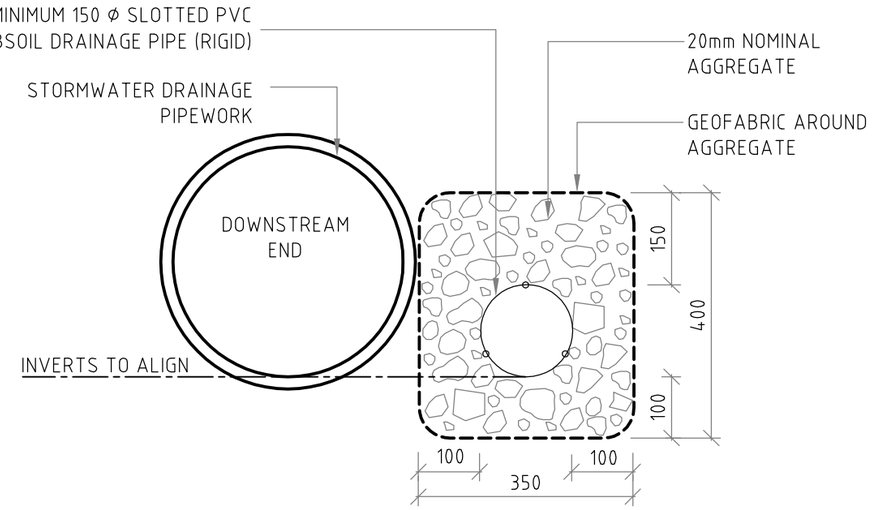

SECTION A

SCALE 1:10

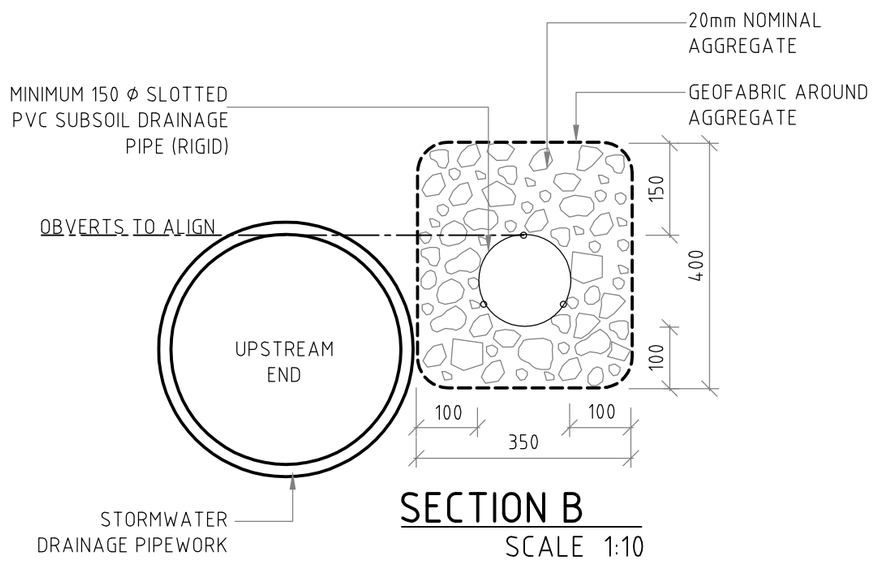

SECTION B

SCALE 1:10

STANDARD SUBSOIL DETAIL APPLIES TO CLAY SITES/ LOCALIZED PERCHING ONLY AND WHERE GROUNDWATER IS >5m BELOW FINISHED SURFACE LEVEL. FOR GROUNDWATER CONTROL REFER TO SUBSOIL DETAIL FOR GROUNDWATER CONTROL

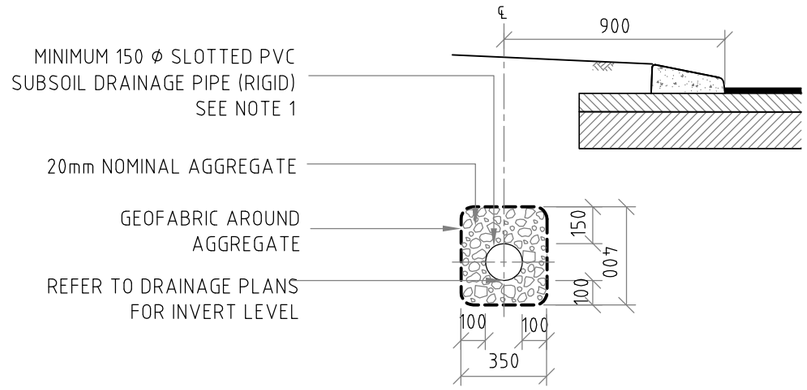

SUBSOIL DRAINAGE DETAIL FOR GROUNDWATER CONTROL

(SEPARATED SYSTEM - REFER TO NOTES 7 & 8 SCALE 1:25

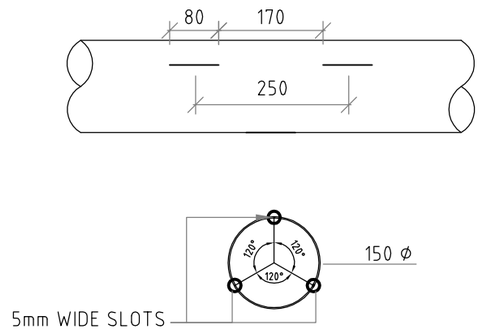

TYPICAL SLOT LAYOUT

SCALE 1:10

NOTES:

1. SUBSOIL DRAINAGE PIPES MUST COMPLY WITH AS2439-PART1, 1981 TYPE 2 RIGID OR SIMILAR PIPES APPROVED BY THE CITY
2. PIPE CLASSIFICATION SN8
3. SLOT CONFIGURATIONS OF SUBSOIL DRAINAGE TO BE EQUISPACED AROUND THE CIRCUMFERENCE AS PER AUSTRALIAN STANDARDS
4. MINIMUM 1500mm^2 SLOTS/METRE OF PIPE
5. SUBSOIL PIPE WORK TO BE PLACED ON THE VERGE SIDE OF THE STORMWATER DRAINAGE (TYPICAL)
6. UPSTREAM END OF SUB-SOIL PIPE NOT CONNECTED TO LINER SHALL BE PROVIDED WITH A SURFACE RISER AND CIRCULAR CONCRETE OR CLASS B DUCTILE IRON OR CAST IRON MAINTENANCE COVER
7. VARYING SUBSOIL ALIGNMENT MAY BE REQUIRED TO ACHIEVE GROUNDWATER CONTROL (ABSOLUTE MINIMUM GRADE 1:250, DESIRABLE GRADE 1: 200)
8. LEVELS FOR SUBSOIL DRAINAGE LINE WILL BE DETERMINED BY LEVELS OF THE WATER TABLE AND MAY BE LOWER THAN THE STORMWATER LINE. DESIGNER SHALL SEEK DIRECTION FROM THE CITY
9. GEOFABRIC TO BE BIDIM A14 OR SIMILARLY APPROVED MATERIAL

AMENDMENTS

REVISION	DATE	DESCRIPTION	BY	CHECKED	APPROVED
3	4/2/2015	LAYERS & DWG NO'S UPDATED	SA	MB	MB
2	16/01/2014	ANNOTATION ADDED & UPDATED	SA	MJ	MB
1	09/12/2011	UPDATE TITLE BLOCK	GL	MB	MB

GENERAL NOTES

1. THIS DRAWINGS ALWAYS REMAINS THE PROPERTY OF THE CITY OF GOSNELLS AND MUST NOT BE RETAINED OR REPRODUCED WITHOUT PERMISSION
2. IN THE ABSENCE OF THE APPROVED SIGNATURE (ie MANAGER TECHNICAL SERVICES) THIS DRAWING SHALL BE TREATED AS PRELIMINARY
3. ALL DIMENSIONS ARE IN MILLIMETRES UNLESS NOTED OTHERWISE

CITY OF GOSNELLS
2120 Albany Highway Gosnells 6110
PO Box 662, GOSNELLS 6990
WESTERN AUSTRALIA
Telephone 08 9397 3000
Facsimile 08 9397 3333
Online www.gosnells.wa.gov.au

STANDARD DRAWING

SUBSOIL DRAINAGE DETAIL

DESIGN	MB	DRAWN	YS	DRAWING	A3
SCALE	AS SHOWN	CHECKED	MB	DATE	30/11/09

STANDARD DRAWING NUMBER ES-19-11

MANAGER TECHNICAL SERVICES M.BOTTE 4/2/15

M. BOTTE

23/05/2017 10:26:07 AM S:\STANDARD DRAWINGS\ES-19-11 SUB SOIL DRAINAGE.DWG

Document Set ID: 9323245
Version: 1, Version Date: 06/08/2026