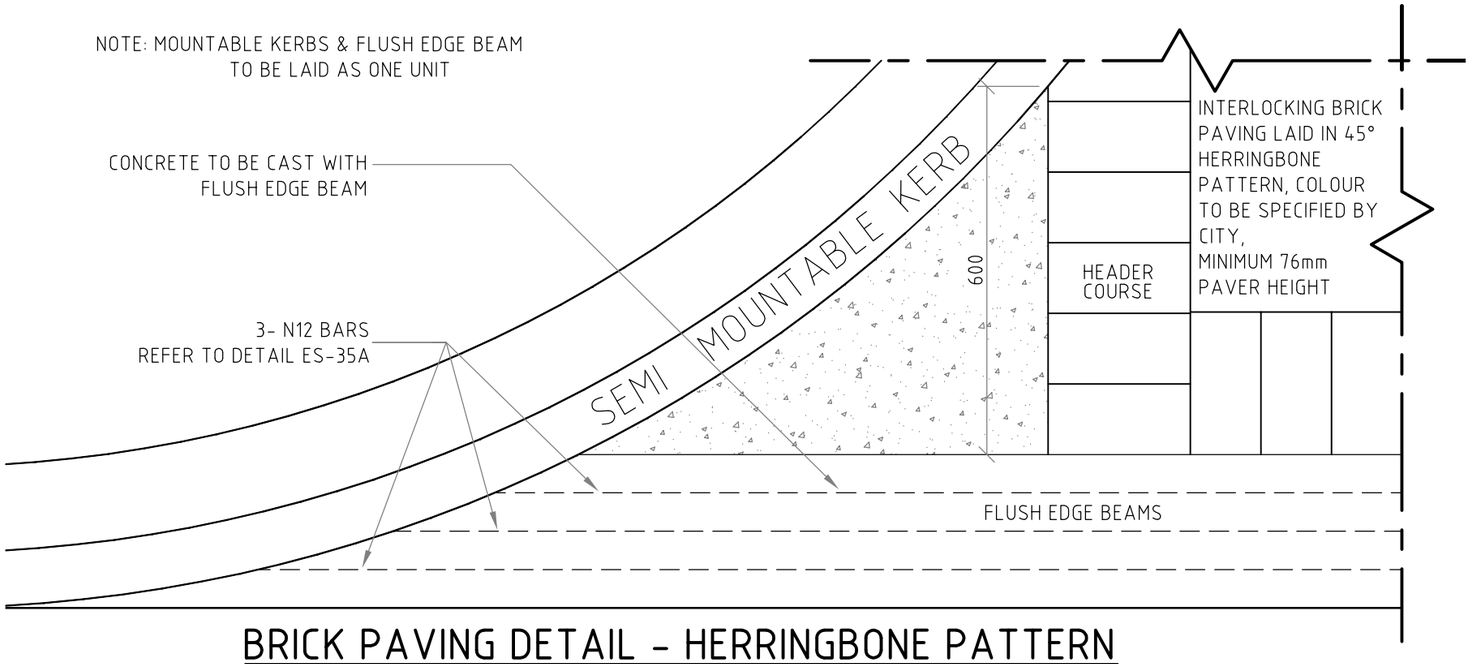

BRICK PAVING DETAIL - HERRINGBONE PATTERN

SCALE 1:100

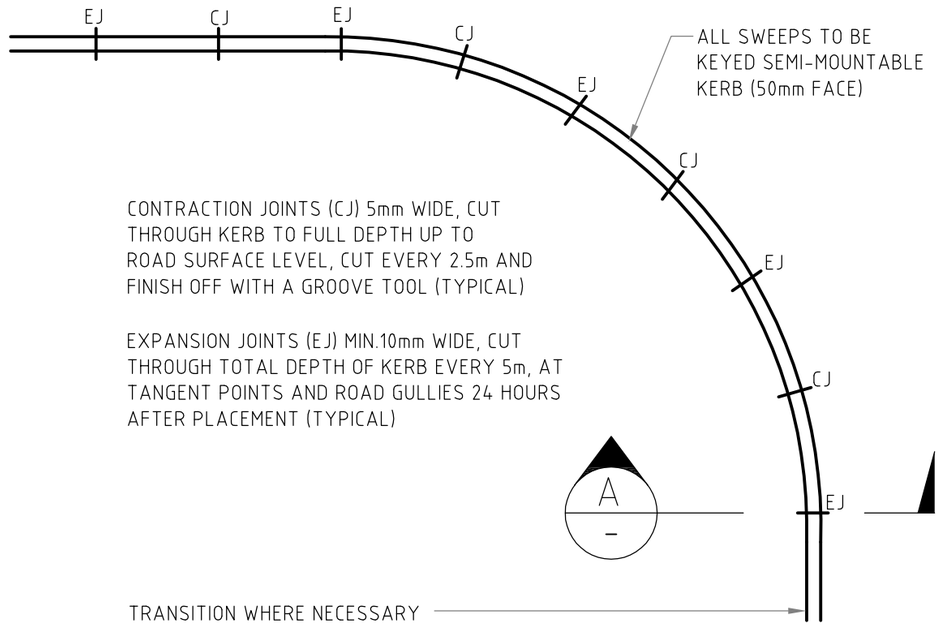

PLAN OF EXPANSION JOINT DETAIL

N.T.S.

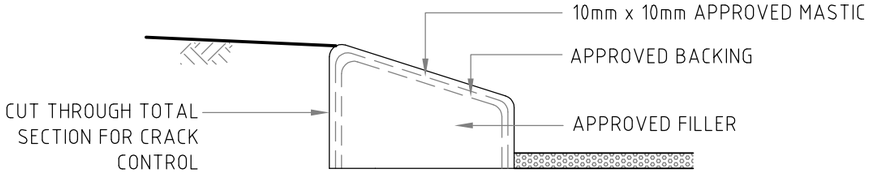

SECTION A-A EXPANSION JOINT

SCALE 1:10

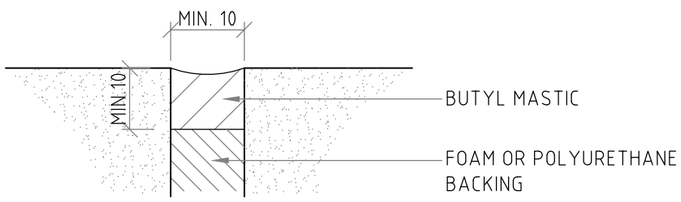

KERB EXPANSION JOINT DETAIL

N.T.S.

NOTES:

KERBING

1. EXPANSION JOINTS AND CONTRACTION JOINTS SHALL BE IN ACCORDANCE WITH THE SPECIFICATIONS
2. APPROVED BACKFILL BEHIND KERB SHALL BE COMPACTED TO A MINIMUM 92% MMDD
3. KERBING ALONG WITH EXPANSION AND CONTRACTION JOINTS SHALL BE CONSTRUCTED PRIOR TO LAYING OF BRICK PAVING
4. ALL KERB PROFILE RADII ARE 20mm UNLESS ADVISED OTHERWISE
5. ALL KERBING ON A KERB ALIGNMENT RADIUS OF LESS THAN 40m SHALL BE KEYED
6. KERBING TO BE EXTRUDED USING 32MPa GRADE CONCRETE IN ACCORDANCE WITH AS 1379 WITH FIBRE MICRO SYNTHETIC FIBRE REINFORCEMENT AT A MIXING RATE OF 0.8kg/m^3

BRICK PAVING

1. 76mm MINIMUM HIGH PERFORMANCE BRICK PAVERS LAID IN HERRINGBONE PATTERN TO CENTRELINE OF ROAD PAVEMENT WITH HEADER COURSE
2. COLOUR TO BE DETERMINED BY THE CITY
3. CUT BRICKS SHALL BE NO SMALLER THAN 1/3 OF THE FULL ORIGINAL BRICK (SURFACE)
4. CONSTRUCTION TO BE CARRIED OUT IN ACCORDANCE WITH THE CITY'S SPECIFICATIONS AND REQUIREMENTS

AMENDMENTS

REVISION	DATE	DESCRIPTION	BY	CHECKED	APPROVED
6	15/04/2016	NOTES AMENEDED	SA	AT	MB
5	16/03/2015	ANNOTATION AMENDED	SA	AT	MB

GENERAL NOTES

1. THIS DRAWINGS ALWAYS REMAINS THE PROPERTY OF THE CITY OF GOSNELLS AND MUST NOT BE RETAINED OR REPRODUCED WITHOUT PERMISSION
2. IN THE ABSENCE OF THE APPROVED SIGNATURE (ie MANAGER TECHNICAL SERVICES) THIS DRAWING SHALL BE TREATED AS PRELIMINARY
3. ALL DIMENSIONS ARE IN MILLIMETRES UNLESS NOTED OTHERWISE

CITY OF GOSNELLS
2120 Albany Highway Gosnells 6110
PO Box 662, GOSNELLS 6990
WESTERN AUSTRALIA
Telephone 08 9397 3000
Facsimile 08 9397 3333
Online www.gosnells.wa.gov.au

STANDARD DRAWING

KERB DETAIL

DESIGN	DRAWN YS	DRAWING A3
SCALE AS SHOWN	CHECKED MB	DATE 22/08/07

STANDARD DRAWING NUMBER
ES-35-4

MANAGER TECHNICAL SERVICES
M.BOTTE 5/12/14
M. BOTTE

23/05/2017 10:47:04 AM S:\STANDARD DRAWINGS\ES-35-4 KERB DETAIL.DWG

Document Set ID: 9097952
Version: 1, Version Date: 17/02/2026