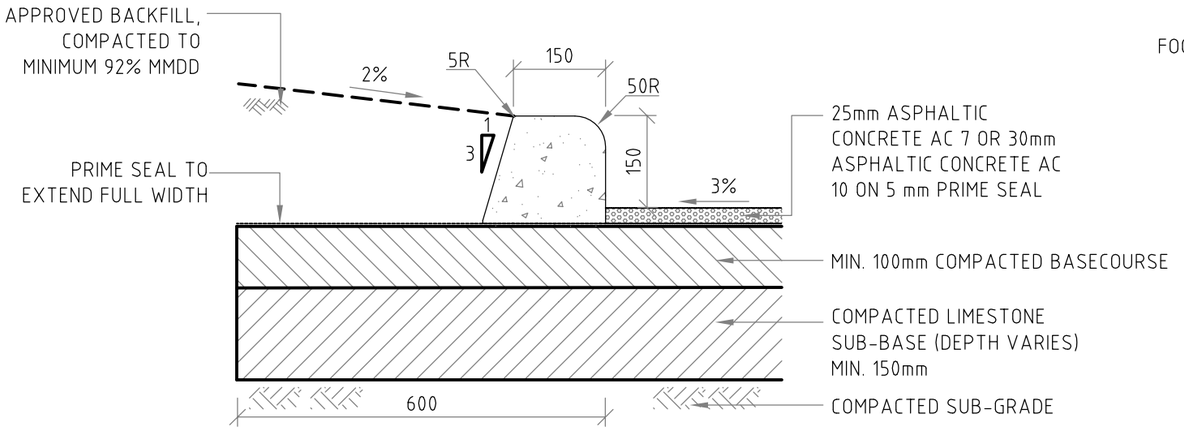

BARRIER KERB DETAIL- UNSEALED TURF/VERGE

SCALE 1:10

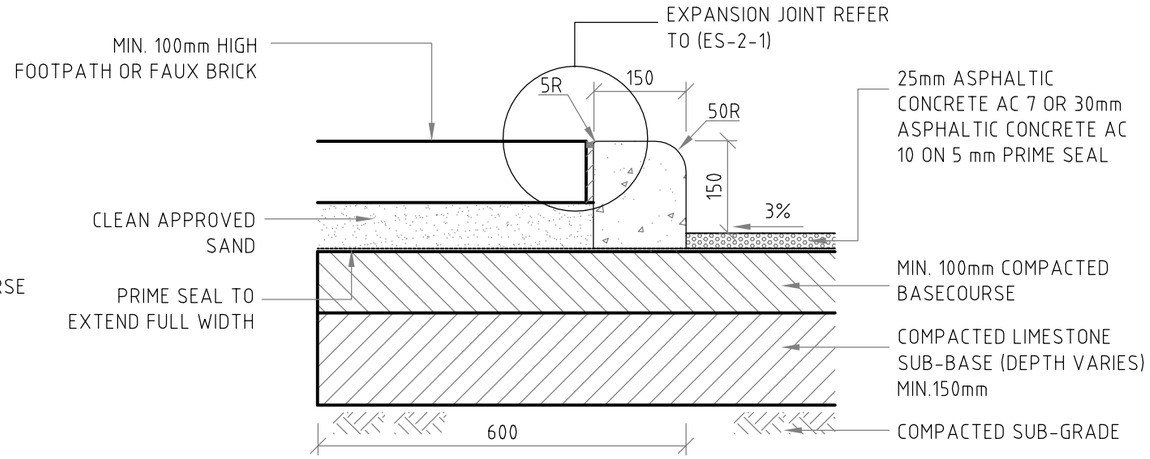

BARRIER KERB DETAIL - PAVED /SEALED VERGE

SCALE 1:10

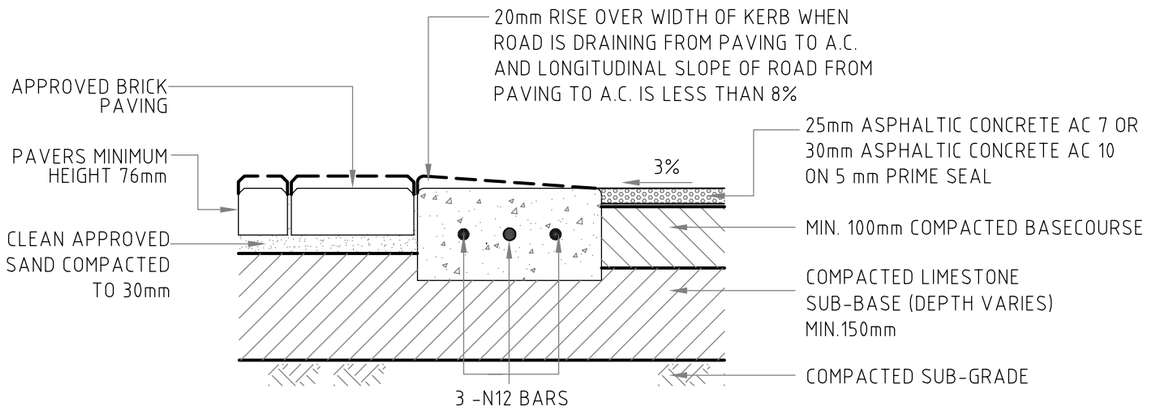

FLUSH EDGE BEAM FOR BRICK PAVING

SCALE 1:10

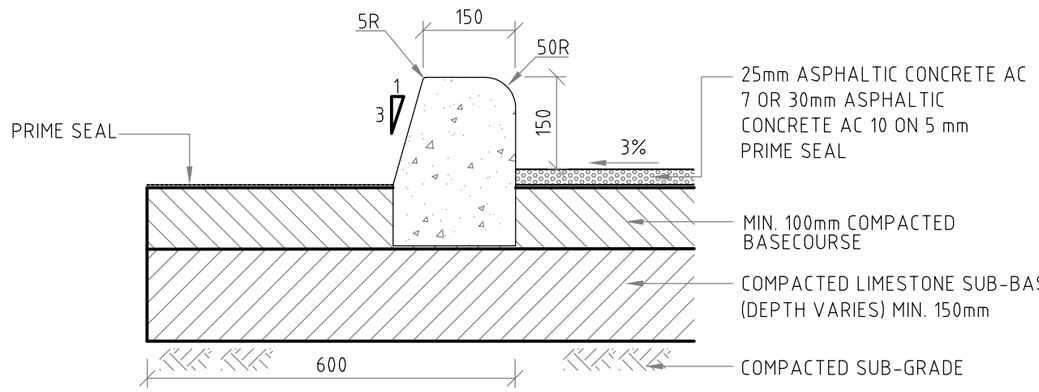

BARRIER KERB DETAIL - KEYED

SCALE 1:10

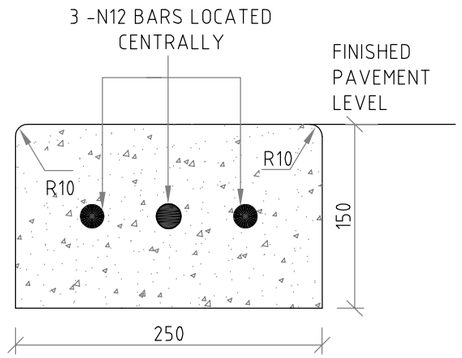

STANDARD FLUSH KERB WITH REINFORCEMENT

SCALE 1:5

NOTES:

1. CONTRACTION JOINTS AT MAXIMUM 2.5m CENTRES
2. EXPANSION JOINTS AT 5m CENTRES
3. KERB JOINTS TO COINCIDE WITH FOOTPATH JOINTS WHERE POSSIBLE (REFER TO ES-49)
4. ALL KERB PROFILE RADII ARE 20mm UNLESS OTHERWISE ADVISED
5. KERBING TO BE EXTRUDED USING 32MPa GRADE CONCRETE IN ACCORDANCE WITH AS1379 WITH MICRO SYNTHETIC FIBRE REINFORCEMENT AT A MIXING RATE OF 0.8kg/m^3
6. WHERE KERB TO BE BOXED IN AFTER PRIME SEAL, BOXED EDGES TO BE RESEALED AFTER KERBING HAS BEEN PLACED
7. PAVEMENT DESIGN SUBJECT TO CITY OF GOSNELLS APPROVAL

AMENDMENTS

REVISION	DATE	DESCRIPTION	BY	CHECKED	APPROVED
5	6/7/2015	ANNOTATION UPDATED FOR CONSISTENCY,	SA	AT	MB
		KERB DETAILS AMENDED			

GENERAL NOTES

1. THIS DRAWINGS ALWAYS REMAINS THE PROPERTY OF THE CITY OF GOSNELLS AND MUST NOT BE RETAINED OR REPRODUCED WITHOUT PERMISSION
2. IN THE ABSENCE OF THE APPROVED SIGNATURE (ie MANAGER TECHNICAL SERVICES) THIS DRAWING SHALL BE TREATED AS PRELIMINARY
3. ALL DIMENSIONS ARE IN MILLIMETRES UNLESS NOTED OTHERWISE

CITY OF GOSNELLS
2120 Albany Highway Gosnells 6110
PO Box 662, GOSNELLS 6990
WESTERN AUSTRALIA
Telephone 08 9397 3000
Facsimile 08 9397 3333
Online www.gosnells.wa.gov.au

STANDARD DRAWING

BARRIER & FLUSH KERB DETAIL

DESIGN		DRAWN YS	DRAWING A3
SCALE	AS SHOWN	CHECKED MB	DATE 22/08/07

STANDARD DRAWING NUMBER ES-35-1

MANAGER TECHNICAL SERVICES

M.BOTTE 5/12/14

M. BOTTE

23/05/2017 10:44:15 AM S:\STANDARD DRAWINGS\ES-35-1 BARRIER AND FLUSH KERBS.DWG

Document Set ID: 6221461
Version: 1, Version Date: 05/02/2020